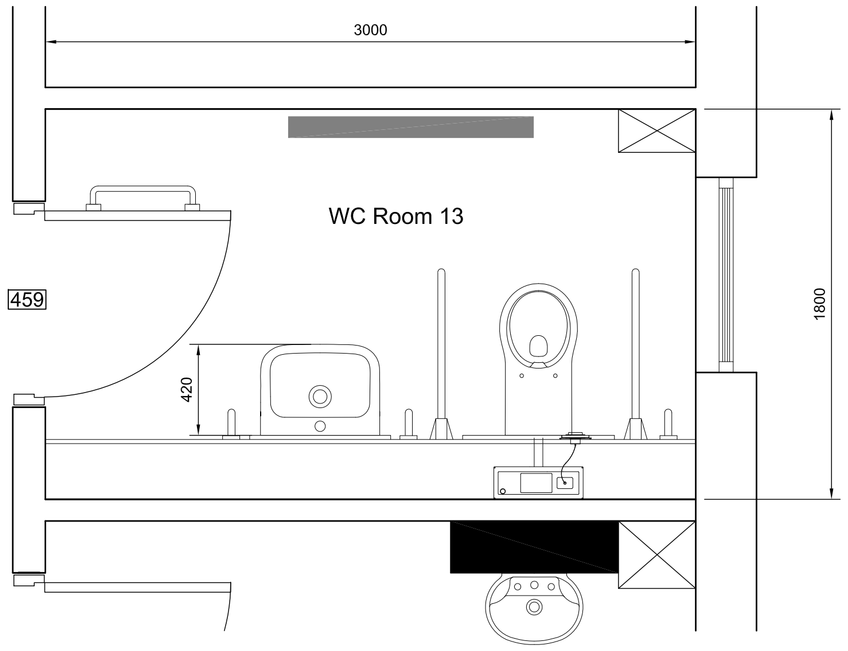

Room 13 WC Layout
1:20

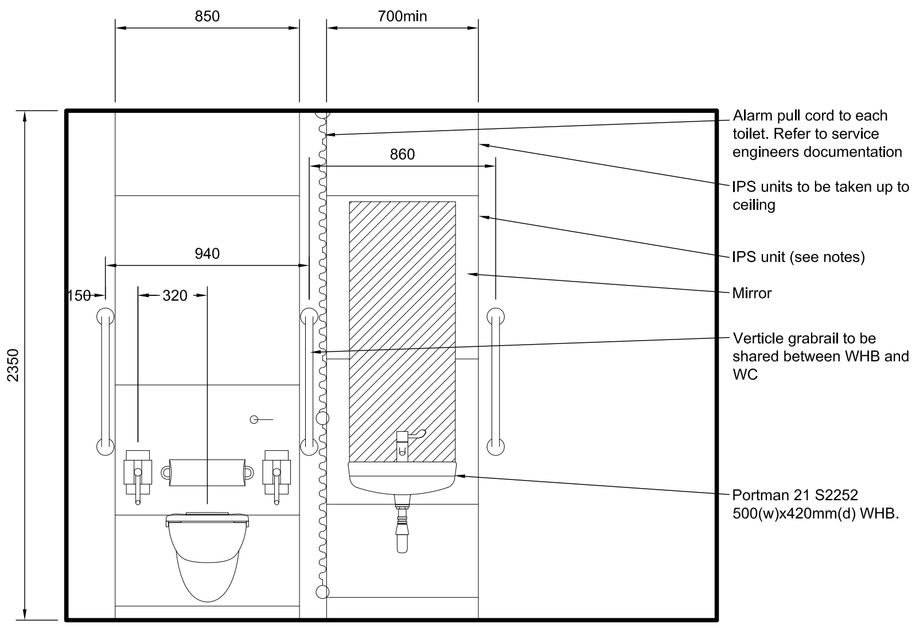

Room 13 WC Elevation
1:20

NOTE: Refer to Service Engineers' documentation and drawings for details of mechanical and electrical items.

Refer to Drawing	
Builder's Compound & Access Plan.	1001
Demolitions, Ceiling Heights, Section.	1002
New Works Plan	1003
Nurses' Station	1004
Office Room 8	1005
WC Room 13	1006
WC Room 17	1007
Door & Ironmongery Schedules	1008
Resident's Dining Room 11 & Linen Room 14	1009
Staff Rooms 5 & 5A	1010
Kitchen	1011

Altro wall cladding panels should be fitted to within 3mm of rigid abutments such as window frames, door frames, architraves, ceilings, quarry tile skirtings etc. Thus ensuring a 2-3mm gap at these points.

This will allow for expansion and contraction to take place.

Prior to sealing the joint, clean the panel and adjacent surfaces.

All 'isolation' joints must be sealed with colour coordinated Altro Mastic XT silicone sealant Ref: AXT/XXX.

Detail Altro wall cladding to abutments eg. architrave

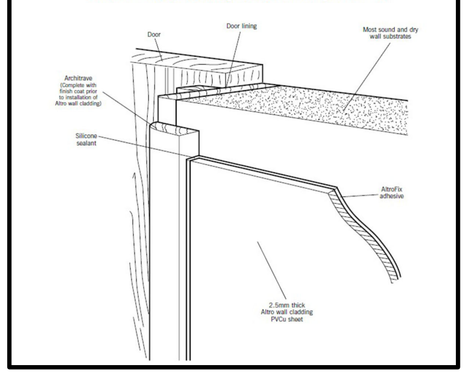

Wall Cladding Door Abutment
N.T.S.

Sanitaryware Schedule				
Room	Item	Quantity	Description	Ref.
Assisted WC (Room 13) Assisted WC (Room 17)	WC	2	S3077(01) (WC HD) Contour 21 rimless wall mounted WC pan horizontal outlet, 70cm HTM projection S3617(67) Conceala 2 cistern 4.5 or 6 litre single flush syphon side supply and internal overflow plastic flushbend, long CP lever S4066(36) Contour 21 seat no cover, top fixing hinges and retaining buffers **(BLUE)** S4303(67) Contour 21 outlet extension connector for 70/75cm WC pan outlet S9139(67) Support bracket for wall mounted WC raised height with bolts S6481(AC) Contour 21 back support rail for 70cm projection HTM64 WC, 40 x 17 x 35mm diameter tube S6884(67) Cushion for back support with clips S4302(67) Contour 21 WC Extended Flushpipe	S3077(01)
	WC IPS boxed out unit	2	Room 13 - Venesta Vepps pre-plumbed panel unit (shared with WHB) room width (3000mm approx) x 270mm. Full floor to ceiling height - colour to clients' choice Room 17 - Venesta Vepps pre-plumbed panel unit width 1300mm x 270mm. Full floor to ceiling height - colour to clients' choice	
	Drop down rail	4	S6360(MY) Contour 21 stainless steel hinged support rail 80 x 35mm diameter, Doc M Compliant	S6360(MY)
	WHB	2	S2252(01) Portman 21 accessible washbasin, 50 x 42cm, 1 taphole no overflow E0062(67) Panel fixing set S8733(AA) Waste 1¼" brass anti theft swivel plug waste, 80mm slotted tail E0079(AA) Trap 1¼" Contemporary metal bottle, 75mm seal BSP male with compression nut and ring	S2252(01)
	Tap	2	A6696(AA) (TP6) Markwik 21+ 1 hole thermostatic basin mixer, single sequential lever, demountable with copper tails A6791(NU) Markwik 21+ deck mounted basin mixer fixing kit for use with 1 taphole Contour 21+ back outlet washbasins	A6696(AA)
	WHB IPS boxed out unit	1	Venesta V-epps pre-plumbed panel unit . Full floor to ceiling height - colour to clients' choice. WHB unit in Assisted WC Room 13 combined with WC unit.	
	Straight Grabrails	7	S6454(MY) Contour 21 stainless steel grab rail straight 60cm long x 35mm diameter	S6454(MY)
	Mirrors	2	1200 x 500mm safety backed 4mm mirror to BS6206 class B & C with polished edges	
	Door Grabrails	2	S6452(MY) Contour 21 stainless steel grab rail straight 45cm long x 35mm diameter	S6452(MY)
Sluice Room (Room 12)	Sluice sink boxed out IPS unit.	1	Venesta Vepps pre-plumbed panel unit 2100(w) x 300mm. Full floor to ceiling height - colour to clients' choice	

NOTES:
1) All soap dispensers, toilet roll holders and other accessories to be supplied by others.
2) All references refer to the Armitage Shanks - Ideal Standard Bluebook except where stated
3) All dimensions to be checked on site.
4) All sanitaryware, brassware and plumbing systems to comply with HTM 64, HTM04 and TGD M and all thermostatic mixing valves to be TMV 3 approved.
5) All plumbing installations to be in compliance with WRAS guidelines and regulations.
6) On completition of all plumbing works a chlorination flush is to be carried out on the plumbing system & system is to be fully tested and re-commissioned.
7) **WHERE SILICONE SEALANT IS REQUIRED SIKA EVERBUILD 565 CLEAN ROOM SILICONE IS TO BE USED.**

NOTES:
• The panels should be installed with a 3-4 mm gap.
• Altro double sided tapes must be fitted approximately 3mm in from the vertical edge of each panel to ensure the panels meet accurately at the joint.
• Altro recommends using masking tape on the front face of the panels to prevent overspill.
• The edges of the panels must be cleaned prior to siliconing.
• Ensure sufficient silicone is pumped into the joint so that it forms up against the double side tapes on the reverse of the panel.
• Once completed, tool off the surplus to leave a neat, flush, sealed joint.
(Remove masking tape immediately sealant is tooled off)
• Ensure a 50mm Overlap detail.
• Coving is to be 150mm minimum.

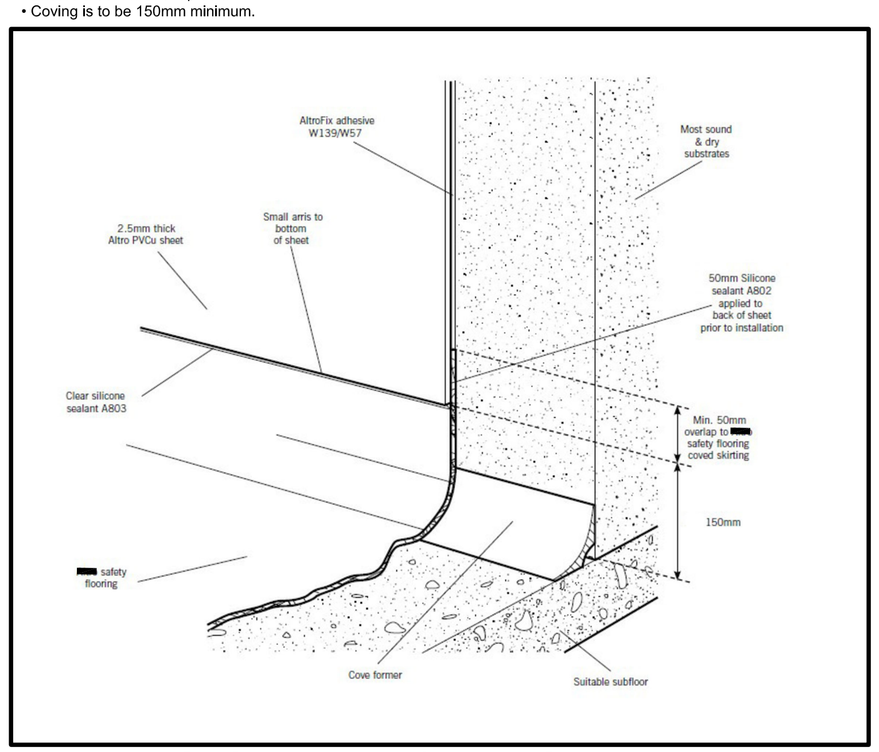

Safety Floor / Wall Cladding Junction
N.T.S.

IPS Panelling System:

Manufacturer: Venesta Washroom Systems.

Product: 'VEPPS Postformed HPL' faced pre-plumbed washroom wall lining system.
- Site framing: Extruded aluminium base and headrail sections and rolled galvanised steel wall channels.
- Panel: 660kg/m³ grade moisture resistant Chipboard faced each side with High Pressure Laminate (HPL).
- Panel Thickness: 18mm nominal.
- Edge treatment: Post formed vertical edges with 1mm matching or contrasting ABS horizontal.
- Flashgaps: Melamine Faced 650kg/m³ grade moisture resistant Chipboard (MFC).

Flashgap Thickness: 18mm nominal.
Panel/Flashgap Colour/Finish: From the Venesta standard colour range.
Site framing: Extruded aluminium base and headrail sections and rolled galvanised ultra steel wall channels.
Baserail:100mm high powdercoated 2 part aluminium baserail to secure subframe units.
Subframe: Rolled galvanised ultra steel subframe with riveted aluminium bracing bars, fitted to site frame with nylon click-fix locator brackets.
- Panel sections fitted to subframe with zinc plated steel clips with butt joints fitted with zinc plated steel dowel clips and mating nylon dowel-docks.
- Pre-plumbing: Sanitary appliances as specified, pre-fixed and sealed to VEPPS unit, unless stated otherwise, all factory assembled.
- Included features: Hinged access panel using riveted linear-bearing hinges in zinc plated steel and nylon with riveted panel ratchets in zinc plated steel allowing 10 different opening heights.

Subframe tie-back system using M8 zinc plated steel tie-back rods and supporting bracketry in zinc plated steel.
Riveted slider brackets in nylon to allow the top panel to rise and fall where a mid-mounted panel is hinged.
Riveted push-pull clips where applicable to allow bottom panels to be removed.
- Integrated factory fitted WC carrier in 26mm SGL for use with wall hung WC's.

Ceilings - Painting:

The underlying cause of any potential damp patches must be rectified before painting commences. Once the damp patch has dried it is to be coated with a damp seal to stop watermarks showing through.

All areas to be painted are to be washed down with sugar soap or a mild detergent.

All electrical fittings to be protected from water.

Any nicotine stained surfaces are to be treated with a stain block before painting commences.

If a chalky coating is present on the wall apply 2 coats of a stabilising solution for porous surfaces.

All imperfections e.g. cracks holes etc are to be filled and sanded. All filled areas are to be sealed with matt emulsion or a plaster sealer.

All new plaster to be sealed with an inital coat of matt emulsion or a preparatory plaster sealer.

Apply 3 coats of Dulux Trade 'Sterishield' emulsion paint or similar or paint to client's requirements to prepared surfaces to comply with BS 8000-12 1989.

Woodwork:

N.B. Care is to be taken when removing old paint which may contain lead.

All doors, architraves & boxed services to be painted are to be filled & sanded, treated with knotting solution where necessary and have 1 coat of primer, 1 undercoat and 2 coats of hygenic gloss finish with colour to client's choice. Where the base of an architrave has been damaged excessively by traffic it should be repaired with an appropriate wood filler or in extreme cases the damaged area should be removed and replaced.

NOTE: In the case of new finishes the health and safety instructions of the manufacturer are to be followed.

General Notes:

Ceiling finish to be Dulux Trade 'Sterishield' emulsion paint or similar.

Room where works are being carried out are to be made good after work and unit to be fully redecorated.
All adjacent areas affected by works (floors, ceilings, walls, reveals etc) to be made good and refinished to match existing.

The contractor shall provide for the protection of all existing furniture, fittings, joinery, equipment and finishes for the duration of the works. Floors shall be fully covered in 1000 gauge polythene taped above nosing of skirtings and 6mm plywood laid over to prevent tearing. Edges of all furniture, fittings, joinery, equipment and finishes, adjoining a surface to be painted, shall be adequately masked in pvc tape before painting commences. Loose furniture will not be removed for the works and the contractor shall allow for covering all existing loose furniture with clean dust and dirt free linen and remove same on completion of the works. The contractor shall be responsible for any damage caused to existing furniture, fittings, joinery, equipment and finishes as a result of his operations and will be required to make good any damaged caused at his own expense.

Ensure that the correct PPE is worn at all times.

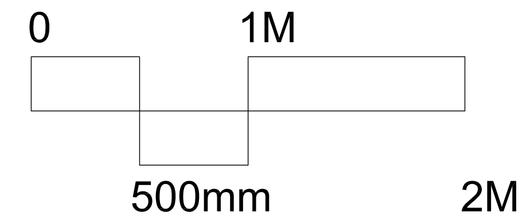

NOTE: CONTRACTORS ARE TO ARRANGE TO INSPECT SITE AT TENDERING STAGE

General Notes :

1. Do not scale from this drawing. Use figured dimensions only.
2. This drawing is to be read in conjunction with all relevant specifications and drawings.
3. All dimensions to be checked on site prior to fabrication.
4. In the event of any discrepancies between drawings or any other issued documentation the contractor is to inform the architect immediately.
5. Contractor not to order door, windows or material before sample of each element has been approved by architect.
6. Contractor to submit quality certification before manufacturer of elements.

ISSUED FOR TENDER

CLIENT: HSE
PROJECT: Refurbishment of Willow Unit at St Josephs Hospital, Ennis, Co Clare
TITLE: WC Room 13

Code	Originator	Zone	level	Type	Role	Number	Status	Revision
2825	HLA	ZZ	00	DR	A	1006		

SCALE: 1:20 A1 DATE: SEPT 2026 DRW BY: DR APP BY: MK

HASSETT LEYDEN ASSOCIATES
ARCHITECTS & CIVIL ENGINEERS
ROSLEVAN SHOPPING CENTRE
TULLA ROAD, ENNIS, CO. CLARE
Tel: 065-6828422 (V95 YN93)